AC/DC Converter
DA10-220SXXG9D4

Typical Features

- ◆ Wide input voltage range: 85-305VAC/120-430VDC
- ◆ No load power consumption ≤ 0.2W
- ◆ Transfer Efficiency 82%(TYP.)
- ◆ Switching Frequency: 65KHz
- ◆ Protections: short circuit, over current
- ◆ Isolation voltage: 3600Vac
- ◆ Meet IEC62368/UL62368/EN62368 test standard
- ◆ Ultra-small package for bare board, industrial design
- ◆ PCB mounting

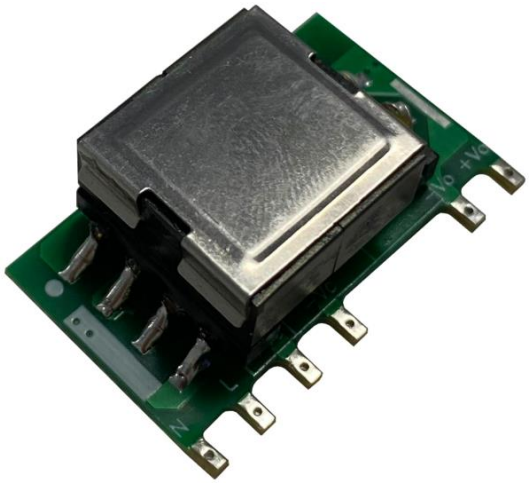

Application Field

DA10-220SXXG9D4 Series----- *a compact size, high efficient power module offered by Aipu. It features universal input voltage range, AC and DC dual-use, low ripple, low temperature rise, low power consumption, high efficiency, high reliability, safer isolation, good EMC performance. EMC and Safety standard meet international EN55032 ,IEC/EN61000. These series have important application for power, industry, instrument and smart home field. For harsh EMC environment, the application circuit in the datasheet is strongly recommended.*

Typical Product List

Certificate	Part No.	Output Specifications			Max. Capacitive Load	Ripple& Noise 20MHz (Max)	Efficiency@ Full Load, 220Vac (Typical)
		Power	Voltage	Current			
		(W)	Vo(V)	Io(m A)	u F	mVp-p	%
-	*DA10-220S3V3G9D4	6.6	3.3	2000	5000	100	75
-	DA10-220S05G9D4	10	5	2000	5000	100	80
-	*DA10-220S12G9D4	10	12	833	3000	120	81
-	*DA10-220S15G9D4	10	15	667	3000	120	81
-	*DA10-220S24G9D4	10	24	416	2000	150	82

Note 1: Due to space limitations, above is only a part of our product list, please contact our sales team for more items.

Note 2: The typical value of output efficiency is based on module is full loaded and burned-in after half an hour.

Note 3: "*" are models being developing.

Note 4: The fluctuation range of full load efficiency(%,TYP) in table is ±2%, full load efficiency= output power/module's input power.

Note 5: Ripple & Noise is tested by twisted pair method, details please refer to Ripple & Noise test at back.

Input Specifications

Item	Operating Condition	Min	Typ.	Max	Unit
Input Voltage Range	AC input	85	220	305	VAC
	DC input	120	310	430	VDC
Input Frequency range	-	47	50	63	Hz
Input Current	115VAC	/	/	0.20	A
	220VAC	/	/	0.10	
Surge Current	115VAC	/	/	10	
	220VAC	/	/	20	
Leakage Current	-	0.25mA TYP/230VAC/50Hz			
Recommended External Input Fuse	-	1A-3A/250VAC slow fusing			
Hot Plug	-	Unavailable			
Remote Control Terminal	-	Unavailable			

Output Specifications

Item		Operating Condition		Min	Typ.	Max	Unit
Voltage Accuracy		Input voltage 220V, any load	Vo1	-	±2.0	±4.0	%
Line Regulation		Nominal load	Vo1	-	±0.5	±1.0	%
Load Regulation		Nominal input voltage, 20%~100% load	Vo1	-	±1.0	±3.0	%
No Load Consumption		Input 115VAC		-	-	0.1	W
		Input 220VAC		-	-		
Minimum Load		Single Output		0	-	-	%
Start up Delay Time		Nominal input voltage (full load)		-	1000	-	mS
Power-off Holding Time		Input 115VAC (full load)			50		mS
		Input 220VAC (full load)		-	80	-	
Dynamic Response	Overshoot range	25%~50%~25% 50%~75%~50%		-5.0	-	+5.0	%
	Recovery time			-5.0	-	+5.0	mS
Output Overshoot		Full input voltage range		≤10%Vo			%
Short circuit Protection				Continuous, self-recovery			Hiccup
Temperature Drift		-		-	±0.03%	-	%/℃
Over Current Protection		Input 220VAC		⩾120% Io, self-recovery			Hiccup

General Specifications

Item	Operating Condition	Min	Typ.	Max	Unit
Switching Frequency	-	-	65	-	KHz
Operating Temperature	-	-40	-	+85	℃
Storage Temperature	-	-40	-	+105	
Soldering Temperature	Wave soldering	260±4℃, time 5-10S			
	Manual soldering	360±8℃, time 4-7S			
Relative Humidity	-	10	-	90	%RH
Isolation Voltage	Input-Output, Test 1min, leakage current≤5mA	3600	-	-	VAC
Insulation Resistance	Input-Output@ DC500V	100	-	-	MΩ
Safety Standard	-	EN60950、IEC60950			
Vibration	-	10-55Hz,10G,30Min,alongX,Y,Z			
Safety Standard	-	CLASSⅡ			
MTBF	-	MIL-HDBK-217F@25℃＞300,000H			

EMC Characteristics

Total Item		Sub Item	Test Standard	Class
EMC	EMI	CE	CISPR22/EN55032	CLASS B (See Recommended Circuit on photo 2)
		RE	CISPR22/EN55032	CLASS B (See Recommended Circuit on photo 2)
	EMS	RS	IEC/EN61000-4-3	10V/m Perf.Criteria B (See Recommended Circuit on photo 1)
		CS	IEC/EN61000-4-6	3Vr.m.s Perf.Criteria B (See Recommended Circuit on photo 1)
		ESD	IEC/EN61000-4-2	Contact ±6KV / Air ±8KV Perf.Criteria B
		Surge	IEC/EN61000-4-5	±1KV Perf.Criteria B
		EFT	IEC/EN61000-4-4	±2KV Perf.Criteria B
		Voltage dips, short interruptions and voltage variations immunity	IEC/EN61000-4-11	0%~70% Perf.Criteria B

Dimension

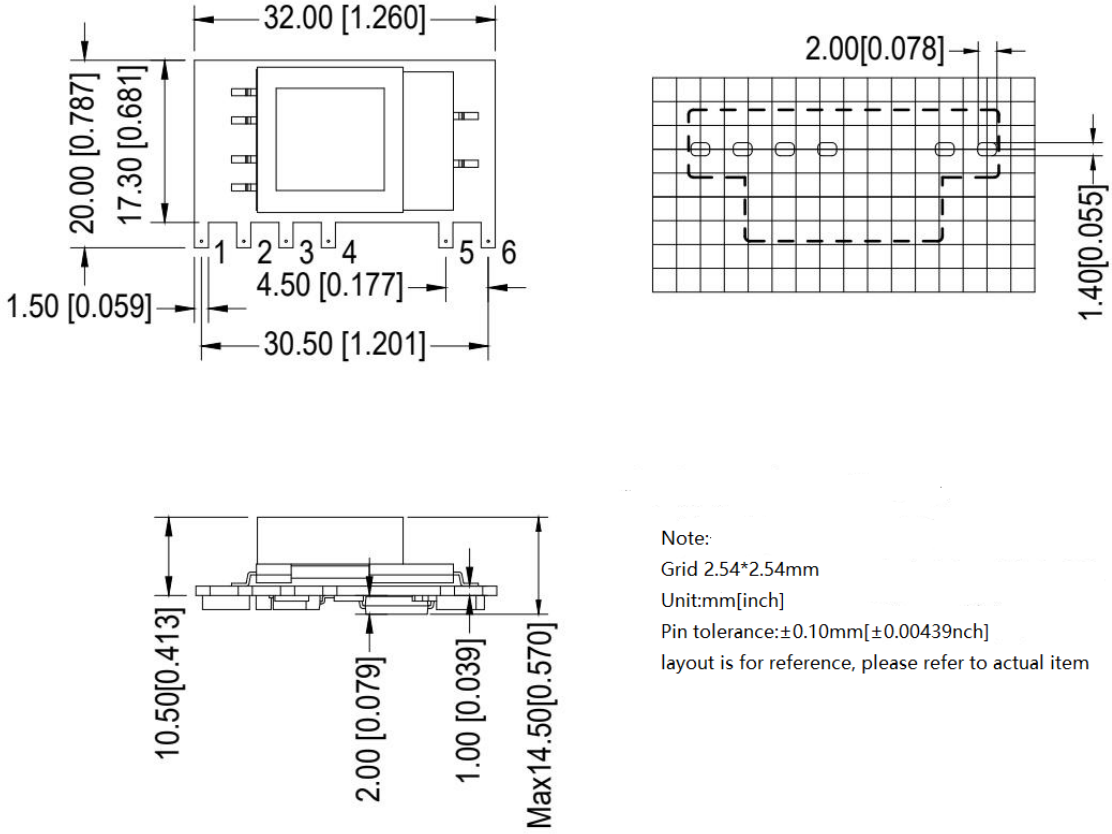

Note:
Grid 2.54*2.54mm
Unit:mm[inch]
Pin tolerance:±0.10mm[±0.00439nch]
layout is for reference, please refer to actual item

Packing Code	L x W x H	
-	32.0 x 20.0x 10.5 mm	1.260 × 0.787 × 0.413 inch

Pin Specification

Pin	1	2	3	4	5	6
Single(S)	AC(N)	AC(L)	+Vc	-Vc	-Vo	+Vo

Ripple& Noise Test: (Twisted Pair Method 20MHZ bandwidth)

Test Method:

(1) 12# twisted pair to connect, Oscilloscope bandwidth set as 20MHz, 100M bandwidth probe, terminated with 0.1uF polypropylene capacitor and 10uF high frequency low resistance electrolytic capacitor in parallel, oscilloscope set as Sample pattern.

(2) Input terminal connect to power supply, output terminal connect to electronic load through jig plate, Use 30cm±2 cm sampling line, Power line selected from corresponding diameter wire with insulation according to the flow of output current.

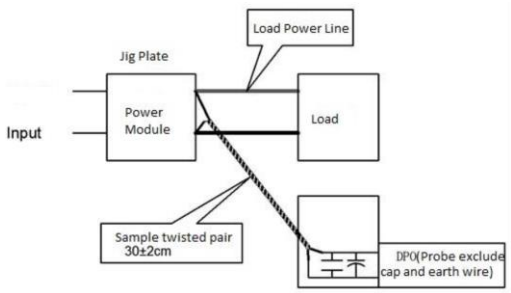

Product Characteristic Curve

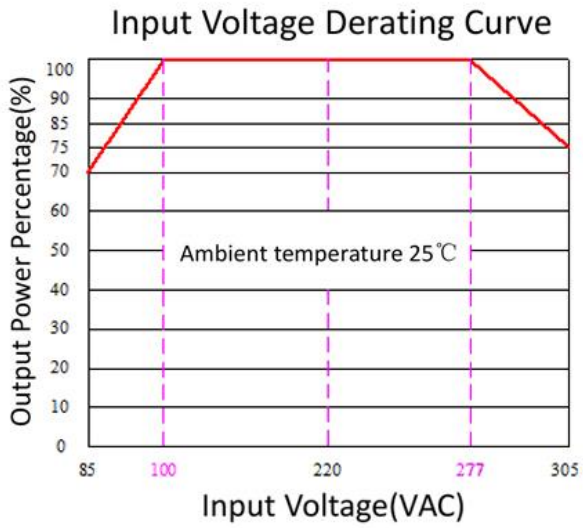

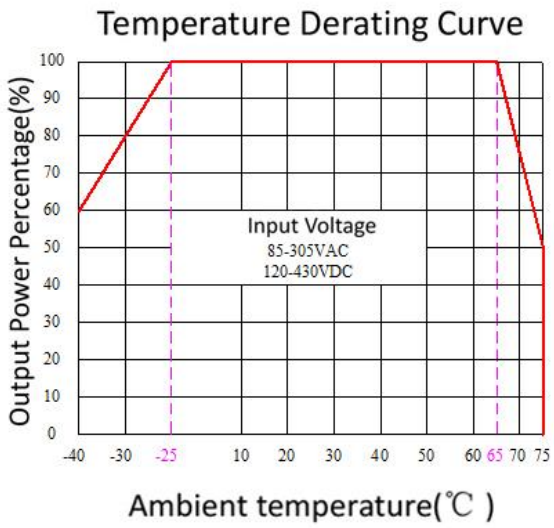

Note 1: Input Voltage should be derated based on Input voltage derating curve when it is 85~100VAC/277~305VAC/120~140VDC/390~430VDC

Note 2: Our product is suitable to use under natural air cooling environment, if use it under closed condition, please contact with us.

Typical Application Circuit and EMC Recommended Circuit

1.Typical Application Circuit

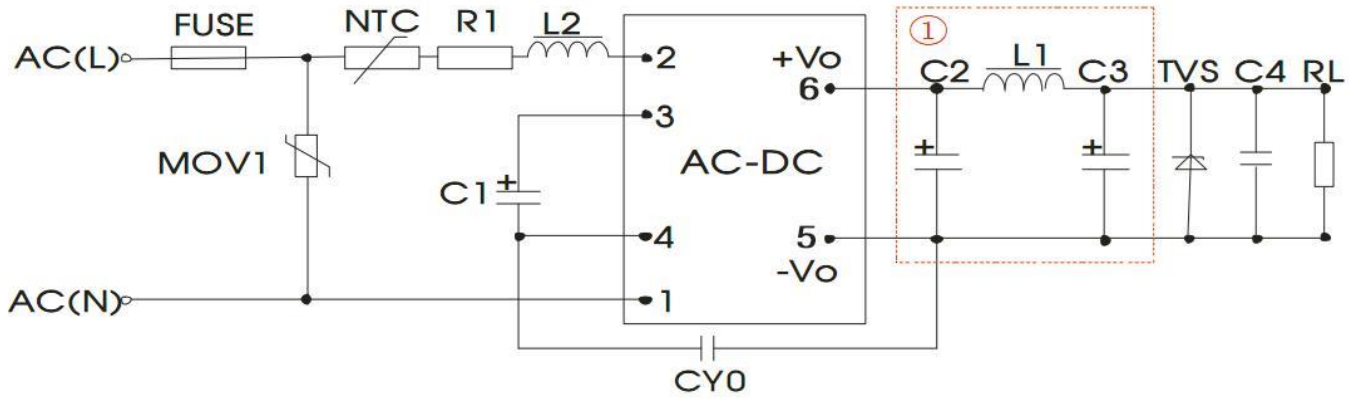

Photo 1

Note:① as Pi filter circuit

Products Number	C1 (Necessary)	C2 (Necessary to connect the external solid-state capacitor)	L1 (Necessary)	C3 (Necessary to connect the external solid-state capacitor)	C4	L2	NTC	CY0	FUSE (Necessary)	TVS Tube
DA10-220S3V3G9D4	22uF /450V	220uF/10V	2.0uH	220uF/10V	0.1uF/ 50V	4.7mH	5D-9	104M/ 400V	3.15A/ 250V	SMBJ7.0A
DA10-220S05G9D4		220uF/10V		220uF/10V						SMBJ7.0A
DA10-220S12G9D4		220uF/16V		220uF/16V						SMBJ20A
DA10-220S15G9D4		220uF/16V		100uF/16V						SMBJ20A
DA10-220S24G9D4		100uF/35V		47uF/35V						SMBJ30A

Note:

1) C1: AC input, C1 is input filter electrolytic capacitor (necessary), recommended value is 10uF/450V;
   DC input, C1 is big filter capacitor in the EMC filter (necessary), recommended value is 10uF/450V;

2) R1 is limited resistor, recommended value is 12Ω, 5W;

3) MOV1 is piezoresistor, recommended model is 10D561K;

2. EMC recommended circuit (Used Under high EMC requirement)

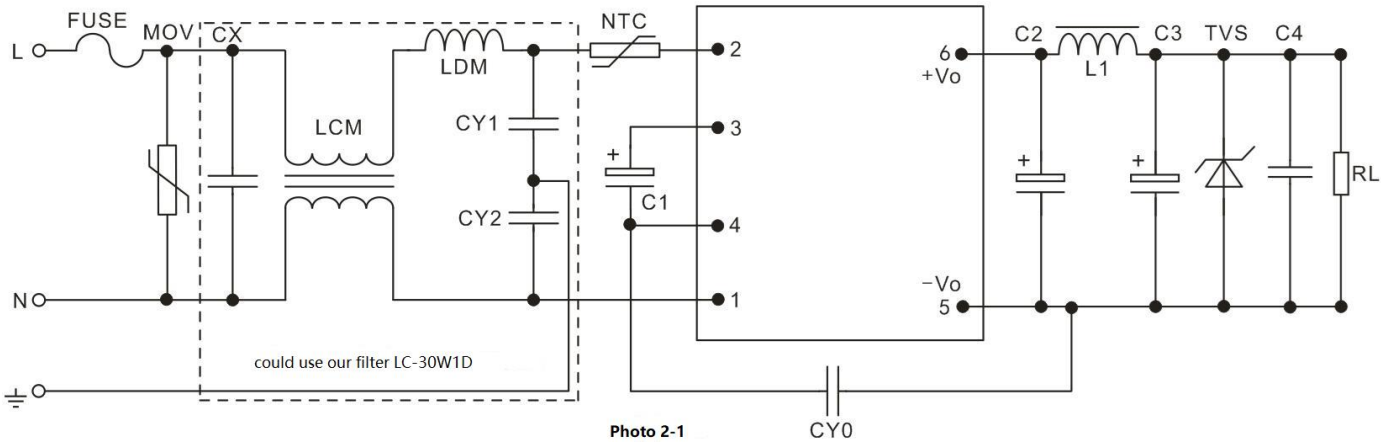

Photo 2-1

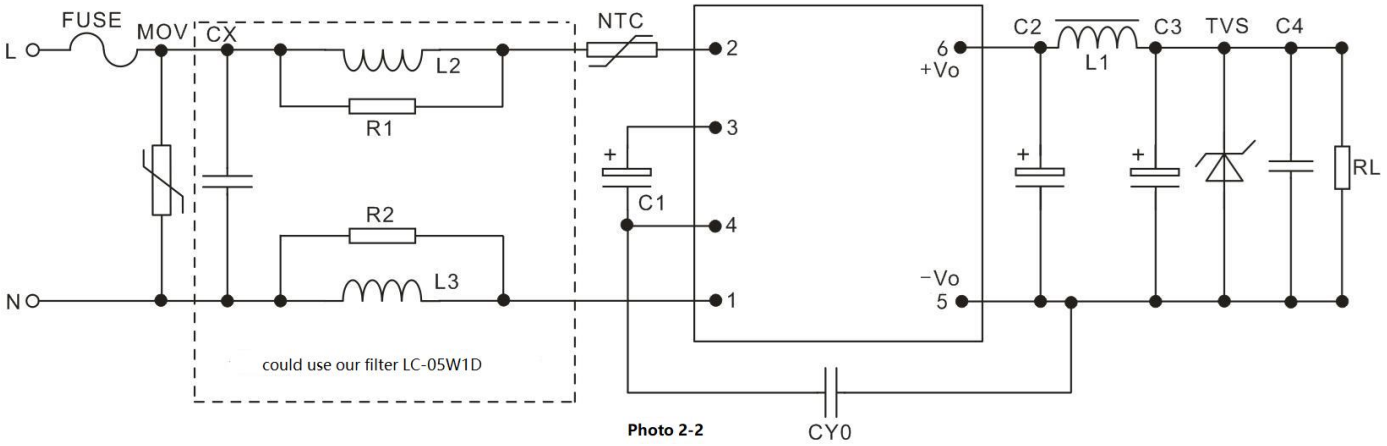

Photo 2-2

Component	Recommend 3.15A, 250V (Necessary)	NTC	5D-9	R1, R2	Resistor 2.2K, above 1/8W
MOV	10D561K	CY1, CY2	1nF/400VAC		
CX	Recommended 0.22uF/275Vac	LDM	330uH		
LCM	40mH min	L2, L3	Color ring inductor 1mH, 1W		

Note 1:

1. The product should be used within the specification range, or it will cause permanent damage to it;
2. The input terminal should connect to fuse;
3. If the product is worked under the minimum requested load, the product performance cannot be guaranteed to comply with all parameters in the datasheet;
4. If the product is not operated within the required load range, the product performance cannot be guaranteed to comply with all parameters in the datasheet;
5. Unless otherwise specified, parameters in this datasheet were measured under the conditions of **Ta=25℃**, **humidity<75%** with nominal input voltage and rated output load(pure resistance load);
6. All index testing methods in this datasheet are based on our Company's corporate standards;
7. The performance indexes of the product models listed in this manual are as above, but some indexes of non-standard model products will exceed the above-mentioned requirements, please directly contact our technician for specific information;
8. We can provide product customization service,
9. Specifications are subject to change without prior notice, please follow up with our website for newest manual.